ALPS

Universal Quad LNB
BSTE4-101A

Specifications

Supply Voltage	11,5 to 19 V	
Current consumption	170 mA (typ.)	
Reception frequency	Low Band	High Band
	10,7-11,7 GHz	11,7-12,75 GHz
L.O. frequency	9,75 GHz	10,6 GHz
IF output	950-1950 MHz	1100-2150 MHz
Conversion gain	55 db (typ.)	
Feedhorn mounting	40 mm (standard size)	
	New Unique Waterstop (included)	
Weight	350 g (typ.)	

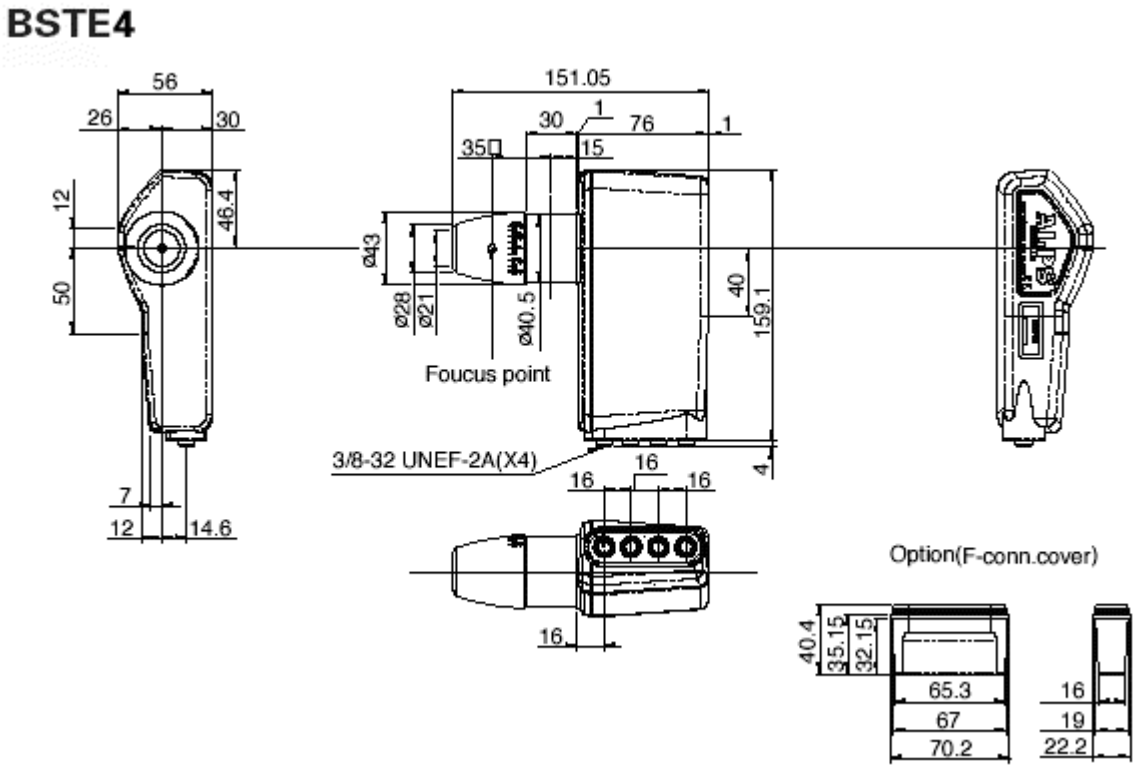

May 2003